DRG NO. 5010116

3RD ANGLE PROJECTION

DESCRIPTION	PART No.
REFERENCE TO GENERAL ASSEMBLY	1013700
REFERENCE TO GENERAL ASSEMBLY	1138100
REFERENCE TO GENERAL ASSEMBLY	1138600
REFERENCE TO WIRING SCHEMATIC	5020153

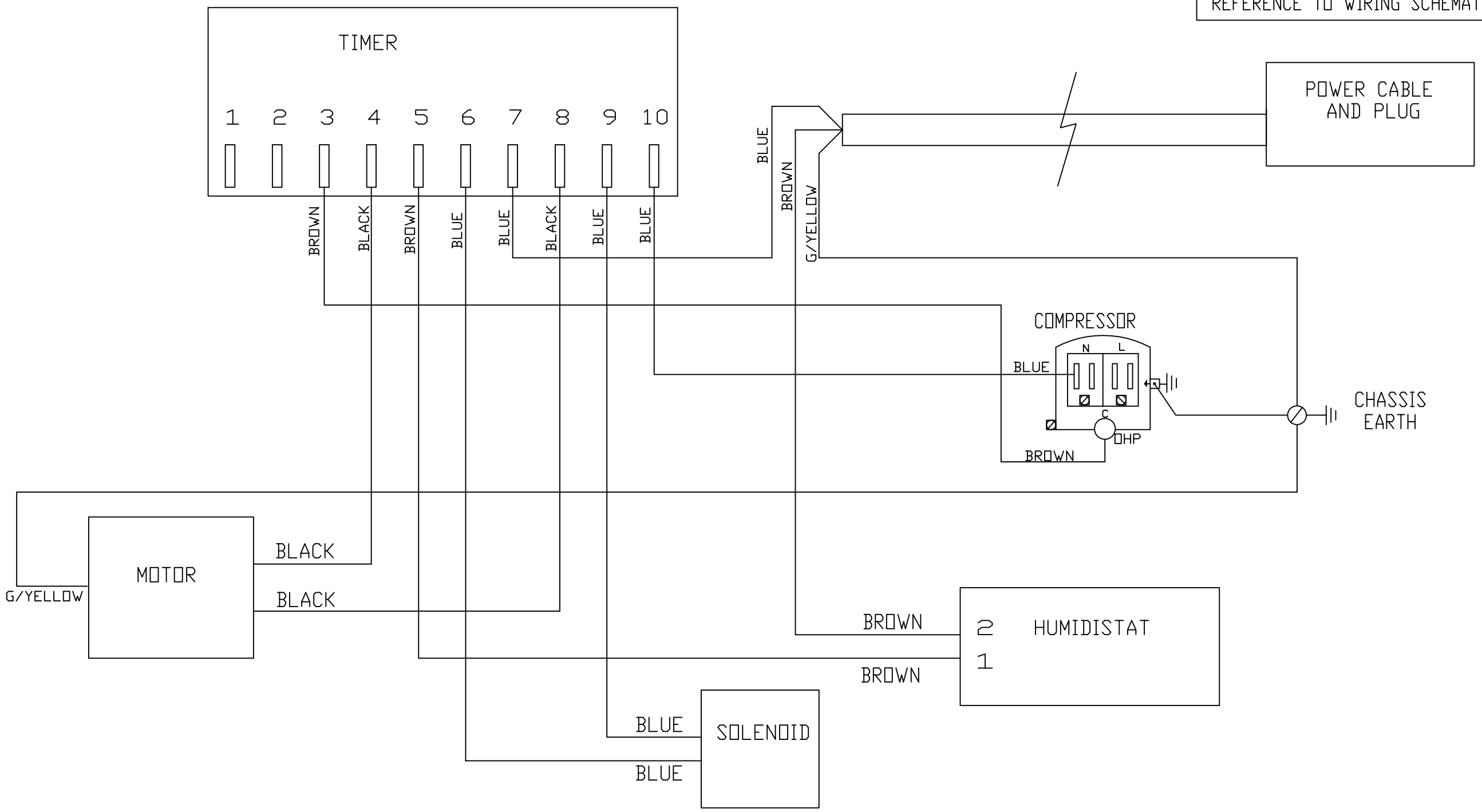

DRAWN C.MASON	ISS.	8	9	10	11	12					
CHECKED	DATE	18.9.89	21.9.89	24.08.93	18.10.93	07/04/05					
APPROVED											
SCALE	C/N		GE	6223 DD	6514 JGL	WDA					

INSPECTION PROCEDURE

MATERIAL

FINISH

TOLERANCE UNLESS STATED

DIMENSIONS IN m.m.

Ebac Limited

TITLE

WIRING DIAGRAM FOR CD30

SECURITY CLASSIFICATION

DRG.NO.

5010116

A3